Topstek Current Transducer TGH3A .. TGH50A

TGH 3A~50A

Features

- Highly reliable Hall Effect device
- Compact and light weight
- Fast response time
- Excellent linearity of the output voltage over a wide input range
- Excellent frequency response (> 50 kHz)
- Low power consumption (12 mA nominal)
- Capable of measuring both DC and AC, both pulsed and mixed
- High isolation voltage between the measuring circuit and the current-carrying conductor (AC2.5KV)
- Extended operating temperature range
- Flame-Retardant plastic case and silicone encapsulate, using UL classified materials, ensures protection against environmental contaminants and vibration over a wide temperature and humidity range

Applications

- UPS systems
- Industrial robots
- NC tooling machines
- Elevator controllers
- Process control devices
- AC and DC servo systems
- Motor speed controller
- Electrical vehicle controllers
- Inverter-controlled welding machines
- General and special purpose inverters
- Power supply for laser processing machines
- Controller for traction equipment e.g. electric trains
- Other automatic control systems

Specifications

Parameter	Symbol	Unit	TGH3A .. TGH50A
Nominal Input Current	I_{fn}	A DC	3 .. 50
Linear Range	I_{fs}	A DC	±9 .. ±150 = 3x I_{fn}
Nominal Output Voltage	V_{hn}	V	4 V±1% at If=I_{fn} (R_L=10kΩ)
Offset Voltage	V_{os}	mV	Within ±40 mV @ I_f=0, T_a=25°C
Output Resistance	R_{OUT}	Ω	<100Ω
Hysteresis Error	V_{oh}	mV	Within ±15 mV @ I_f=I_{fn}→0
Supply Voltage	V_{CC}/V_{EE}	V	±15V ±5%
Linearity	ρ	%	Within ±1% of I_{fn}
Consumption Current	I_{CC}	mA	±12 mA nominal, ±16 mA max
Response Time (90%V_{hn})	T_r	μsec	5 μsec max. @ $d I_f / dt = I_{fn}$ / μsec
Frequency bandwidth (-3dB)	f_{BW}	Hz	DC to 50kHz
Thermal Drift of Output	-	%/°C	Within ±0.1 %/°C @ I_{fn}
Thermal Drift of Zero Current Offset	-	mV/°C	Within ±1.5 mV/°C @ I_{fn}
Dielectric Strength	-	V	AC2.5KV X 60 sec
Isolation Resistance @ 1000 VDC	R_{IS}	MΩ	>1000 MΩ
Operating Temperature	T_a	°C	-15°C to 80°C
Storage Temperature	T_s	°C	-20°C to 85°C
Mass	W	g	8 g

Appearance, dimensions and pin identification

All dimensions in mm ±0.2, holes –0, +0.2 except otherwise noted.

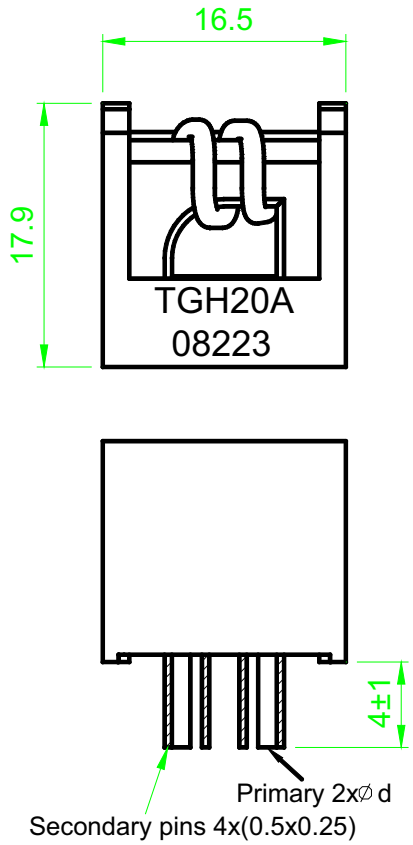

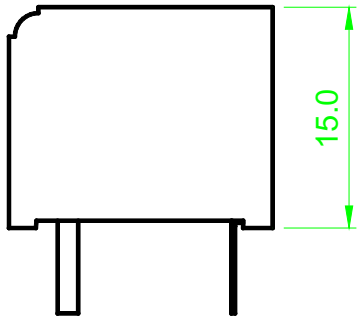

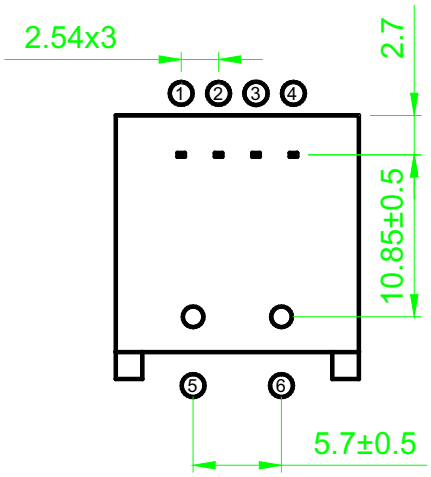

①	−15V
②	0V
③	+15V
④	VOUT
⑤	I+
⑥	I−

Primary Current Input Pin Diameter	3A-5A	6A-10A	11A-17A	18A-24A	25A-50A
d(mm)	0.8	1.0	1.2	1.4	1.6